Sistema Fuel Sentry

Cuantifica el consumo de su motor de combustión.

Descripción

Fill-Rite ofrece soluciones completas de sistemas para el monitoreo del uso de la energía a través del manejo sofisticado del consumo de combustible entrante y saliente. El sistema se basa en dos medidores serie TM combinados con un compacto totalizador electrónico de dos canales. El paquete Fuel Sentry se puede expandir con compensación de la temperatura en uno o ambos medidores de flujo. Con esta potente capacidad, es posible llevar un control del uso, el desperdicio, el uso ilegal de combustible, el combustible no gastado y las ineficiencias del sistema en calderas, motores diésel y otros equipos industriales que consumen combustible.

Consumo de combustible de motor diésel, generadores, calderas y calentadores.

Los motores de combustión poseen bombas donde alimentan el sistema y el fluido no gastado se recircula para su reutilización. Medir el consumo con un solo medidor se hace un trabajo difícil debido a que le porcentaje de flujo que entra no es totalmente consumido. El sistema **Fuel Sentry** fue desarrollado para dar una solución **sencilla, robusta, precisa y económica.**

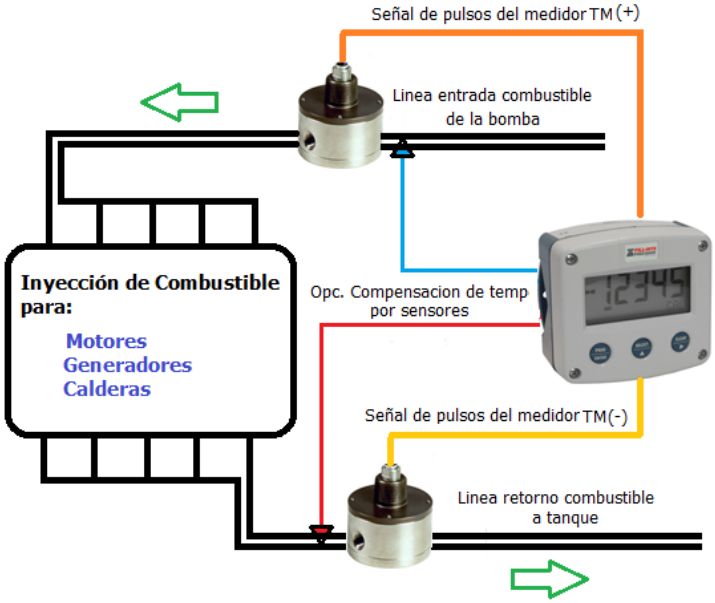

Características y beneficios

- Sistema ampliable para ajustarse a una gran variedad de flujos
- Tamaños mixtos de medidores de entrada y salida
- Administra el retorno del combustible al tanque diario/de almacenamiento
- Compensación de la temperatura a través de un factor de corrección (salida de temperatura constante) o sensores de temperatura
- Lleva un control del consumo neto total.

TUTHILL
Transfer Systems
www.fppmeters.com

FUEL CONSUMPTION SYSTEMS

- Engines
- Generators
- Boilers

Model TM03 on a tug boat

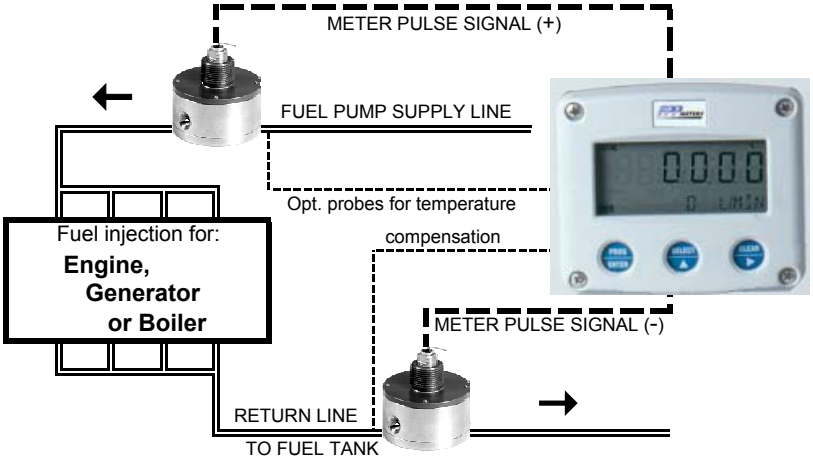

- The **Fuel Sentry** totalizer can be installed local or up to 250' (75 m) remote. With an amplifier, signals can reach further.
- Fuel Sentry totalizers can display sum or differential value (net consumption).
- Fuel Sentry comes standard with pulse & 4-20 mA output signals. RS232 or RS485 serial port is optional.
- ELNC-6127 Fuel Sentry comes with temperature compensation for both lines.

FPP METERS:

Pressure: 150, 400 or 1500 PSI (10, 28 or 103 BAR)
Temperature: -40°F/+300°F (-40°F/+150°C) with remote totalizer.
Viscosity: Standard to 2,000 SSU (400 cP),
to 1,500,000 SSU (350,000 cP) with HV rotors.

Model	Mat'l	Size	GPM	lpm	l/h
TM02	D	¼"	0.3	1.1	68
TM03	A & D	⅜"	3.0	11.4	680
TM04	A & D	½"	10	38	2250
TM06	A, C & D	¾"	20	76	4500

TM Series accuracy: +/-0.5% over 10:1 operating range.

Model	Mat'l	Size	GPM	lpm	m³/h
TS10	A & D	1"	40	150	9
TS15	A & C	1½"	60	230	14
TS20	C	2"	100	380	23
TS20	A	2"	150	570	34
TS30	A & C	3"	200	760	45

TS Series accuracy: +/-0.25% over 10:1 operating range.

A: Anodized aluminum case, Ryton rotors & Viton seals.
C/D: 303SS or CF8M case, Ryton rotors & Teflon seals.

Fuel Sentry totalizers:

Enclosure: Die-cast aluminum, IP67/NEMA 4X
Dimensions: 5⅛" x 4½" x 2⅜" (130 x 114 x 58 mm)
Temperature: -22°F/+176°F (-30°C/+80°C)
Powered by: 3.6V lithium battery (1 x C cell)
Opt.: 8-24VAC or 8-30VDC, incl. DC to pulser
80-240VAC, incl. DC to pulser
Input: 2 channel, A+B or A-B.
Display: LCD, 0.67" & 0.3" (17 & 8 mm) characters.
Data protection EEPROM backup of all settings.
Security: Password protected.

ELNC-6116

- Calculated Rate, Total & Accumulative Total
- Pulse & Analog (4-20 mA) outputs

ELNC-6127

- Temperature compensation on both channels
- Calculated Rate, Total & Accumulative Total
- Pulse & Analog (4-20 mA) outputs

Optional: 2-wire RS232, MODBUS protocol ASCII/RTU
2-wire RS485, MODBUS protocol ASCII/RTU
4-wire RS485, MODBUS protocol

TUTHILL Transfer Systems
Av. Mexico 823 Recoleta Santiago
dog@dog.cl www.dog.cl/FULESENTRY
Tel +56 2 2979 0377 Movil +56 9 8449 1011

TUTHILL Transfer Systems
www.fppmeters.com

FPP METERS

FUEL CONSUMPTION SYSTEMS

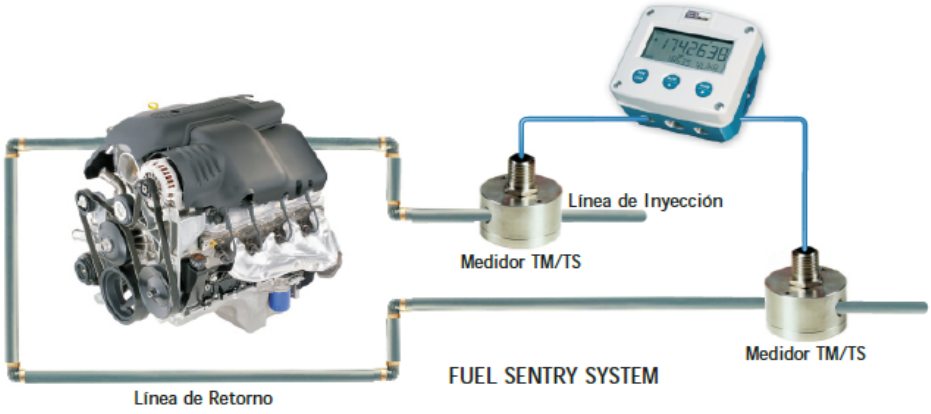

- **Engines**
- **Generators**
- **Boilers**

- The **Fuel Sentry** totalizer can be installed local or up to 250' (75 m) remote. With an amplifier, signals can reach further.
- Fuel Sentry totalizers can display sum or differential value (net consumption).
- Fuel Sentry comes standard with pulse & 4-20 mA output signals. RS232 or RS485 serial port is optional.
- ELNC-6127 Fuel Sentry comes with temperature compensation for both lines.

FPP METERS:

Pressure: 150, 400 or 1500 PSI (10, 28 or 103 BAR)
Temperature: -40°F/+300°F (-40°F/+150°C) with remote totalizer.
Viscosity: Standard to 2,000 SSU (400 cP),
to 1,500,000 SSU (350,000 cP) with HV rotors.

Model	Mat'l	Size	GPM	lpm	l/h
TM02	D	¼"	0.3	1.1	68
TM03	A & D	⅜"	3.0	11.4	680
TM04	A & D	½"	10	38	2250
TM06	A, C & D	¾"	20	76	4500

TM Series accuracy: +/-0.5% over 10:1 operating range.

Model	Mat'l	Size	GPM	lpm	m³/h
TS10	A & D	1"	40	150	9
TS15	A & C	1½"	60	230	14
TS20	C	2"	100	380	23
TS20	A	2"	150	570	34
TS30	A & C	3"	200	760	45

TS Series accuracy: +/-0.25% over 10:1 operating range.

A: Anodized aluminum case, Ryton rotors & Viton seals.
C/D: 303SS or CF8M case, Ryton rotors & Teflon seals.

Fuel Sentry totalizers:

Enclosure: Die-cast aluminum, IP67/NEMA 4X
Dimensions: 5⅛" x 4½" x 2⅜" (130 x 114 x 58 mm)
Temperature: -22°F/+176°F (-30°C/+80°C)
Powered by: 3.6V lithium battery (1 x C cell)
Opt.: 8-24VAC or 8-30VDC, incl. DC to pulser
80-240VAC, incl. DC to pulser
Input: 2 channel, A+B or A-B.
Display: LCD, 0.67" & 0.3" (17 & 8 mm) characters.
Data protection EEPROM backup of all settings.
Security: Password protected.

ELNC-6116

- Calculated Rate, Total & Accumulative Total
- Pulse & Analog (4-20 mA) outputs

ELNC-6127

- Temperature compensation on both channels
- Calculated Rate, Total & Accumulative Total
- Pulse & Analog (4-20 mA) outputs

Optional: 2-wire RS232, MODBUS protocol ASCII/RTU
2-wire RS485, MODBUS protocol ASCII/RTU
4-wire RS485, MODBUS protocol

TUTHILL Transfer Systems
48513 Highway 51 North, P.O.Box 400
Tickfaw, LA 70466, USA
Tel 985-542-5200 Fax 985-542-7394
US: Customer Care 1-888-578-3258

Available through:

Typical Fuel Consumption Systems

A:

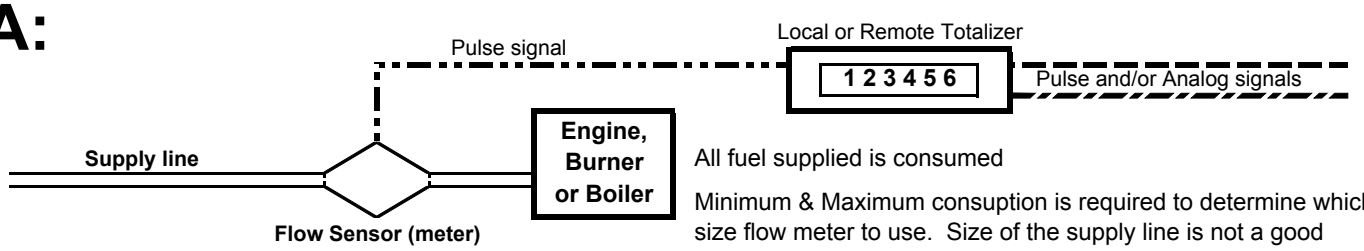

All fuel supplied is consumed

Minimum & Maximum consuption is required to determine which size flow meter to use. Size of the supply line is not a good indicator for this purpose.

B:

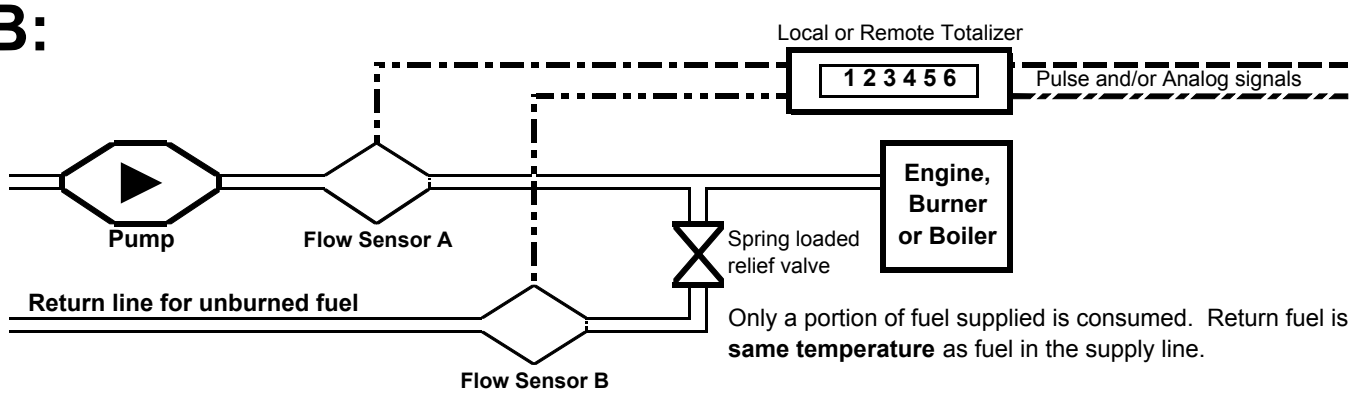

Only a portion of fuel supplied is consumed. Return fuel is **same temperature** as fuel in the supply line.

2-channel **differential totalizer** adds volume recorded by flow sensor A, and subtracts volume recorded by flow sensor B. This records the NET consumption.

To select components, following information is required:

I. Fuel pump capacity (usually fixed, but might vary with engine RPM)
II.a Engine minimum consumption (idle)
II.b Engine maximum consumption (fuel load)

C:

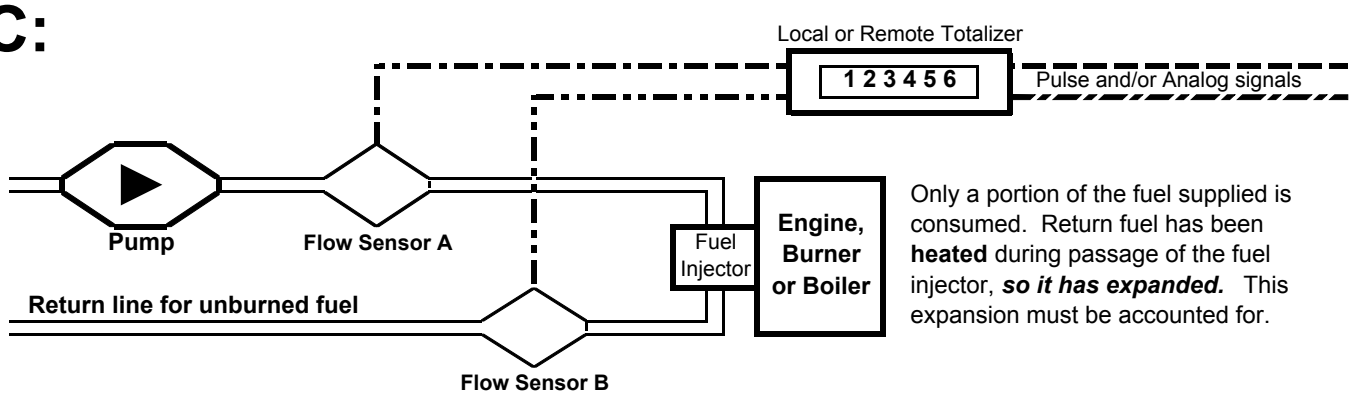

Only a portion of the fuel supplied is consumed. Return fuel has been **heated** during passage of the fuel injector, ***so it has expanded.*** This expansion must be accounted for.

C.1 Temperature Corrected

Since the temperature rise is constant regardless of fuel temperature coming in, measure the temperature difference between supply & return lines. Diesel & fuel oil expands 0.09% for each °C (= 0.05% for each °F), calculate the necessary correction to the K-factor for flow sensor B and program ELNC-6116 accordingly.

C.2 Temperature Compensated

Apply actual temperature compensation to one or both lines, which requires ELNC-6127. If the fuel comes from an underground tank, or other environment with relatively steady temperature, then temperature compensation on return line only will suffice.

To select components, same information as for Type B system is required, plus choice between ELNC-6116 & ELNC-6127.

TUTHILL
Transfer Systems
www.tuthill.com

FUEL CONSUMPTION SYSTEMS

- **Engines**
- **Generators**
- **Boilers**

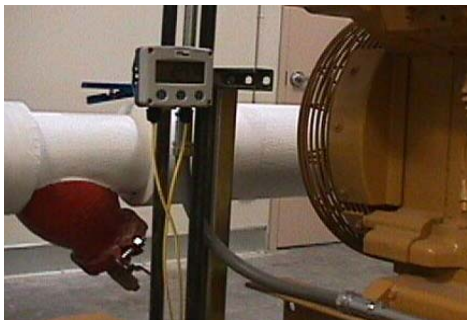

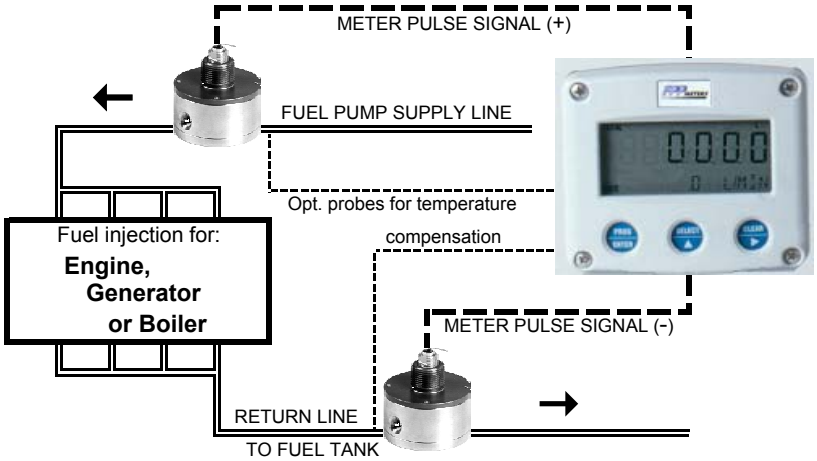

- The **Fuel Sentry** totalizer can be installed local or up to 250' (75 m) remote. With an amplifier, signals can reach further.
- Fuel Sentry totalizers can display sum or differential value (net consumption).
- Fuel Sentry comes standard with pulse & 4-20 mA output signals. RS232 or RS485 serial port is optional.
- ELNC-6127 Fuel Sentry comes with temperature compensation for both lines.

FPP METERS:

Pressure: 150, 400 or 1500 PSI (10, 28 or 103 BAR)
Temperature: -40°F/+300°F (-40°F/+150°C) with remote totalizer.
Viscosity: Standard to 2,000 SSU (400 cP),
to 1,500,000 SSU (350,000 cP) with HV rotors.

Model	Mat'l	Size	GPM	lpm	l/h
TM02	C	¼"	0.3	1.1	68
TM03	A & C	⅜"	3.0	11.4	680
TM04	A & C	½"	10	38	2250
TM06	A & C	¾"	20	76	4500

TM Series accuracy: +/-0.5% over 10:1 operating range.

Model	Mat'l	Size	GPM	lpm	m³/h
TS10	A & C	1"	40	150	9
TS15	A & C	1½"	60	230	14
TS20	A & C	2"	100	380	23
TS2H	A	2"	150	570	34
TS30	A & C	3"	200	760	45

TS Series accuracy: +/-0.25% over 10:1 operating range.

A: Anodized aluminum case, Ryton rotors & Viton seals.
C: 303SS or CF8M case, Ryton rotors & Teflon seals.

Fuel Sentry totalizers:

Enclosure: Die-cast aluminum, IP67/NEMA 4X
Dimensions: 5⅛" x 4½" x 2⅜" (130 x 114 x 58 mm)
Temperature: -22°F/+176°F (-30°C/+80°C)
Powered by: 3.6V lithium battery (1 x C cell)
Opt.: 8-24VAC or 8-30VDC, incl. DC to pulser
80-240VAC, incl. DC to pulser
Input: 2 channel, A+B or A-B.
Display: LCD, 0.67" & 0.3" (17 & 8 mm) characters.
Data protection: EEPROM backup of all settings.
Security: Password protected.

ELNC-6116

- Calculated Rate, Total & Accumulative Total
- Pulse & Analog (4-20 mA) outputs

ELNC-6127

- Temperature compensation on both channels
- Calculated Rate, Total & Accumulative Total
- Pulse & Analog (4-20 mA) outputs

Optional: 2-wire RS232, MODBUS protocol ASCII/RTU
2-wire RS485, MODBUS protocol ASCII/RTU
4-wire RS485, MODBUS protocol

TUTHILL Transfer Systems
Av. Mexico 823 Recoleta Santiago
dog@dog.cl www.dog.cl/FULESENTRY
Tel +56 2 2979 0377 Movil +56 9 8449 1011